RITZ

Instrument Transformers

Ritz Instrument Transformers

Price List 2017

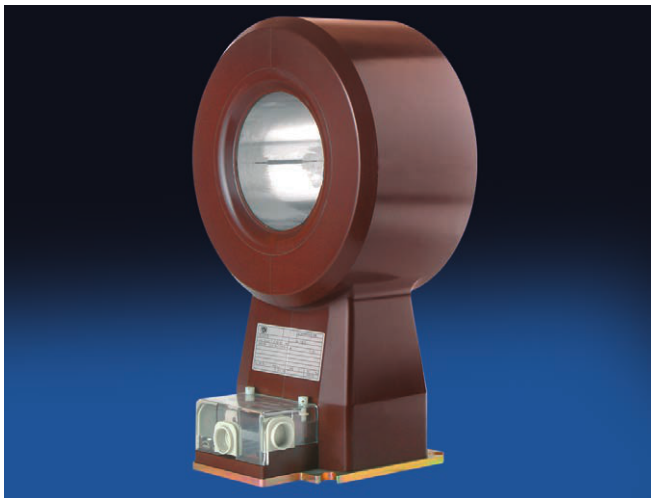

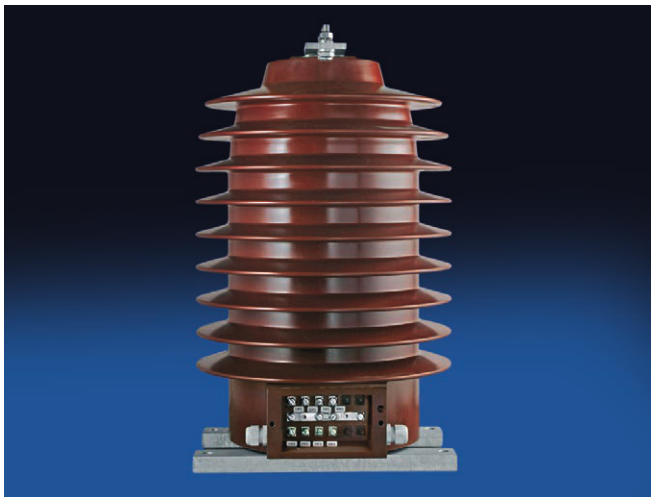

1.0. Medium Voltage Current and Voltage Transformers

1.1 General

Instrument transformers are transformers, which convert high currents or voltages into measurable and standardized currents or voltages, which are proportional and in-phase to the primary signal. They are intended to supply electrical measuring instruments, meters, relays or other electrical devices.

CT according to DIN-Design

PT according to DIN-Design

Current Transformer

A current transformer is designed to convert the primary rated current which flows through the primary winding.

The secondary winding must generally be short circuited at any time, otherwise dangerous high voltages can occur at the secondary terminals.

The secondary connected devices are connected in series.

Current Transformers can be equipped with one or more independent magnetic cores with equal or different characteristics for measuring, metering and/or protective purposes.

Voltage Transformer

Voltage transformers have only one iron core with attached secondary winding (s).

If an open delta circuit (da-dn) is necessary, an additional winding can be provided for single pole insulated transformers.

It is extremely dangerous to short circuit a voltage transformer.

For single pole insulated transformers the end of the primary winding is grounded as “N” inside of the secondary terminal box, and must not be removed during operation.

AIS 12kV Voltage Transformer Series.
GSES12-01RS

- ***Feature:***

The secondary terminals are embedded in the resin body and protected by a removable plastic box, and can be sealed. Grounding screw is connected to the bottom plate.

- ***Standard***

Indoor application, complied with IEC61869-3
Insulation Level: 12/28/75kV, Class: E
Voltage Withstand: 1.9Un/8h & 1.2Un/continuous

- ***Outline Drawing :***

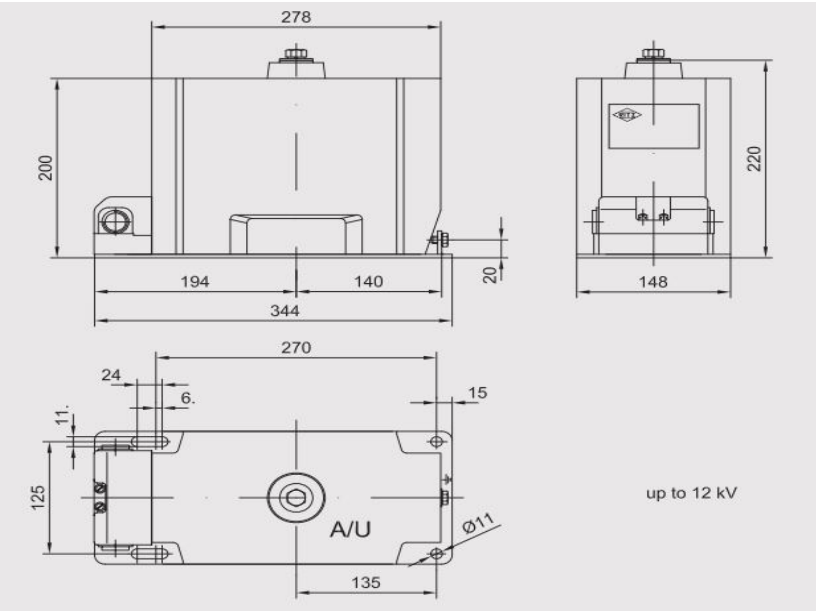

approx.weight =28kg

Type	*Rated Voltage*	*Primary Voltage*	*Secondary Voltage*				*VA rating*	*Unit Price*
			1st core(measuring)		*2nd core(protection)*			
			Sec.Voltage	*Class*	*Sec.Voltage*	*Class*		
		Vpn	*Vsn1*		*Vsn2*			
	kV	*V*	*V*		*V*	*class)*	*VA*	*(THB)*
	3.6	*3300 / √ 3*	*110 / √ 3*	*0.5*	*110 / √ 3*	*3P*	*40*	*22,500.00*
GSES12-01RS	*7,2*	*6600 / √ 3*	*110 / √ 3*	*0.5*	*110 / √ 3*	*3P*	*40*	*22,500.00*
	12	*11000 / √ 3*	*110 / √ 3*	*0.5*	*110 / √ 3*	*3P*	*40*	*22,500.00*

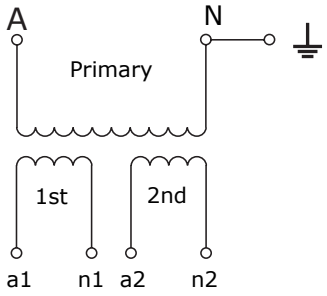

Schematic double core insulated voltage transformer

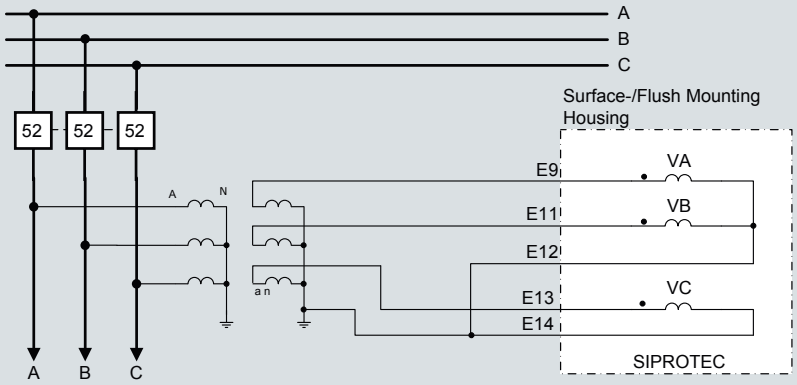

Example for connection type "V_{AN}, V_{BN}, V_{CN}" load-side voltage connection

AIS 12kV Voltage Transformer Series.
GSES12-14RS

- ***Feature:***

The secondary terminals are embedded in the resin body and protected by a removable plastic box, and can be sealed. Primary fuse is included, no extra fuse and space required.

- ***Standard***

Indoor application, complied with IEC61869-3
Insulation Level: 12/28/75kV, Class: E
Voltage Withstand: 1.9Un/8h & 1.2Un/continuous

- ***Outline Drawing :***

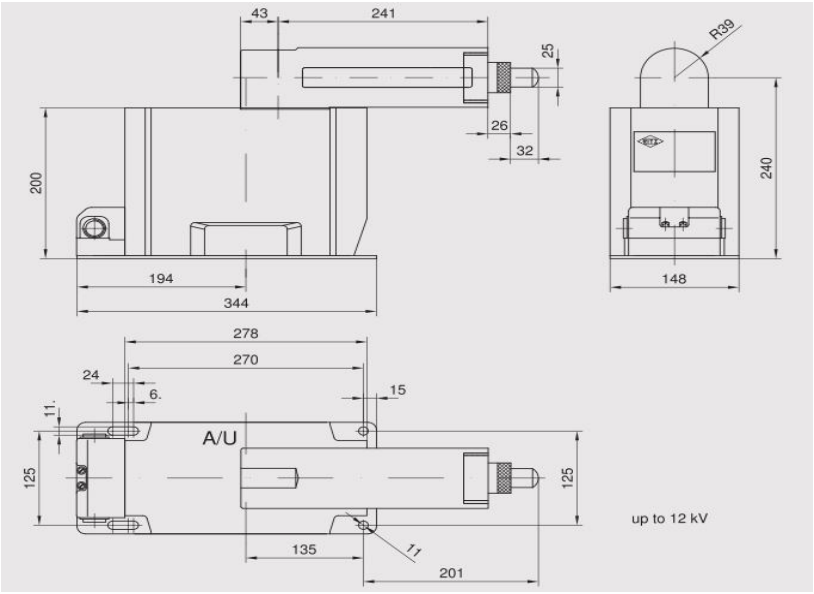

approx.weight =28kg

Type	*Rated Voltage*	*Primary Voltage*	*Secondary Voltage*				*VA rating*	*Unit Price*
			1st core(measuring)		*2nd core(protection)*			
			Sec.Voltage	*Class*	*Sec.Voltage*	*Class*		
		Vpn	*Vsn1*		*Vsn2*			
	kV	*V*	*V*		*V*	*class)*	*VA*	*(THB)*
	3,6	*3300 / √3*	*110 / √3*	*0.5*	*110 / √3*	*3P*	*40*	*37,000.00*
GSES12-14RS	*7,2*	*6600 / √3*	*110 / √3*	*0.5*	*110 / √3*	*3P*	*40*	*37,000.00*
	12	*11000 / √3*	*110 / √3*	*0.5*	*110 / √3*	*3P*	*40*	*37,000.00*

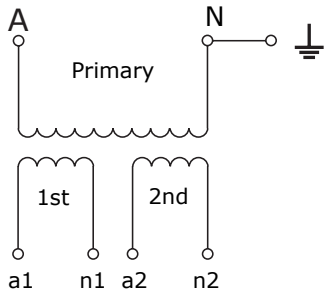

Schematic double core insulated voltage transformer

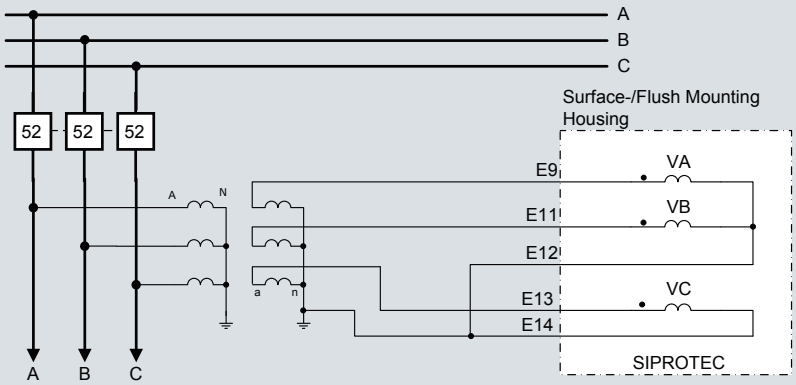

Example for connection type "V_{AN}, V_{BN}, V_{CN}" load-side voltage connection

AIS 12kV Voltage Transformer Series.
GSES12-34RS

● ***Feature :***

The secondary terminals are embedded in the resin body and protected by a removable plastic box, and can be sealed. Primary fuse is included, no extra fuse and space required.

● ***Standard :***

Indoor application, complied with IEC61869-3

Insulation Level: 12/28/75kV, Class: E

Voltage Withstand: 1.9Un/8h & 1.2Un/continuous

● ***Outline Drawing :***

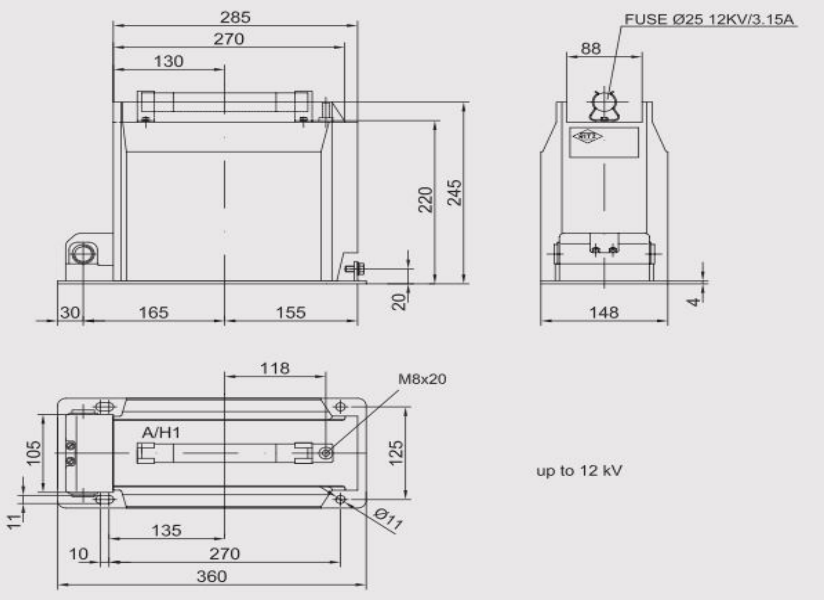

approx.weight =28kg

Type	*Rated Voltage*	*Primary Voltage*	*Secondary Voltage*				*VA rating*	*Unit Price*
			1st core(measuring)		*2nd core(protection)*			
		Vpn	*Sec.Voltage Vsn1*	*Class*	*Sec.Voltage Vsn2*	*Class*		
	kV	*V*	*V*		*V*	*class)*	*VA*	*(THB)*
	3,6	*3300 / √3*	*110 / √3*	*0.5*	*110 / √3*	*3P*	*40*	*35,250.00*
GSES12-34RS	*7,2*	*6600 / √3*	*110 / √3*	*0.5*	*110 / √3*	*3P*	*40*	*35,250.00*
	12	*11000 / √3*	*110 / √3*	*0.5*	*110 / √3*	*3P*	*40*	*35,250.00*

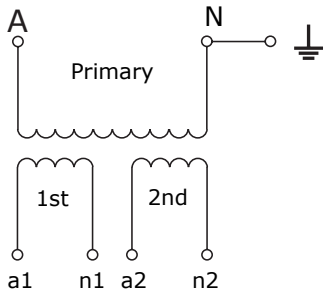

Schematic double core insulated voltage transformer

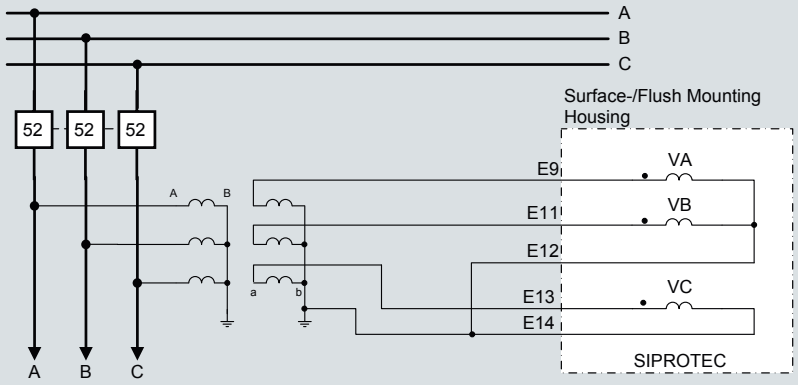

Example for connection type "V_{AN}, V_{BN}, V_{CN}" load-side voltage connection

AIS24 24kV Voltage Transformer Series GSE24

- ***Feature :***

The secondary terminals are embedded in the resin body and protected by a removable plastic box, and can be sealed. Primary fuse is included, no extra fuse and space required.

- ***Standard :***

Indoor application, complied with IEC61869-3
Insulation Level: 24/50/125kV, Class: E
Voltage Withstand: 1.9Un/8h & 1.2Un/continuous

- ***Outline Drawing :***

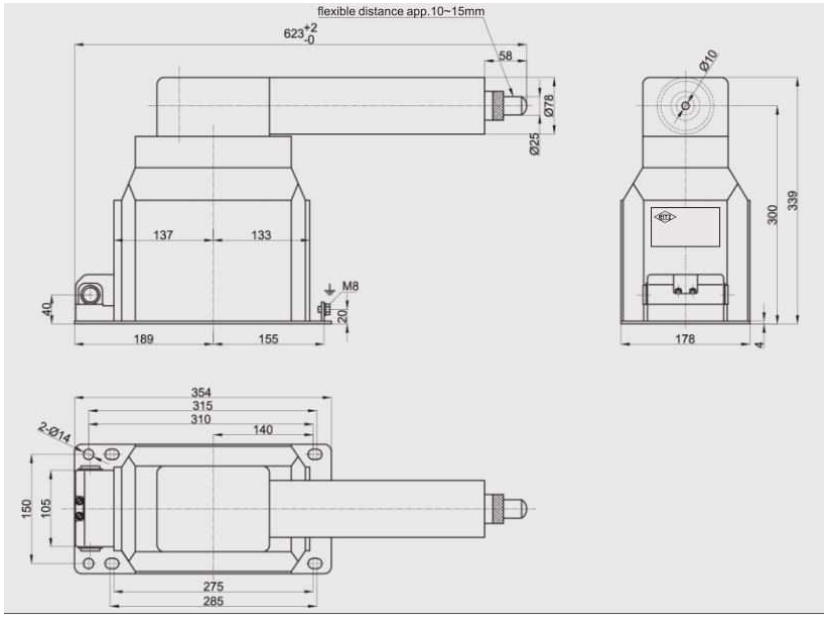

approx.weight =35kg

Type	*Rated Voltage*	*Primary Voltage*	*Secondary Voltage*				*VA rating*	*Unit Price*
			1st core(measuring)		*2nd core(protection)*			
		Vpn	*Sec.Voltage Vsn1*	*Class*	*Sec.Voltage Vsn2*	*Class*		
	kV	*V*	*V*		*V*	*class)*	*VA*	*(THB)*
GSE 24	*24*	*22000 /√3*	*110 / √3*	*0.5*	*110 / √3*	*3P*	*40*	*46,500.00*

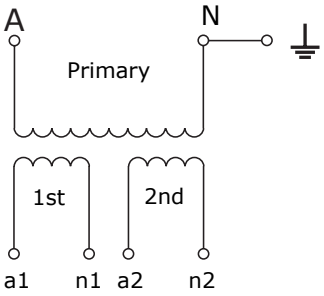

Schematic double core insulated voltage transformer

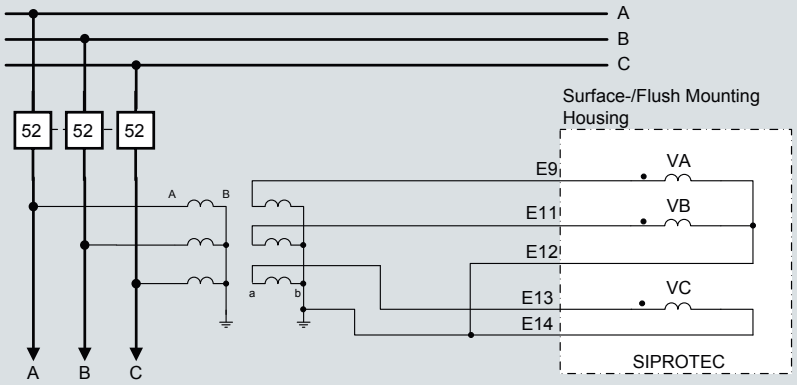

Example for connection type "V_{AN}, V_{BN}, V_{CN}" load-side voltage connection

AIS 12kV Current Transformer Series.
GSWS12-01RS / GSWS12-05RS 12kV 25kA

- ***Feature :***

The secondary terminals are embedded in the resin body and protected by a removable plastic box, and can be sealed.
Capacitive Layer 20pF can be added as option for voltage indication.

- ***Standard :***

Indoor application, complied with IEC61869-2
Insulation Level: 12/28/75kV, Class: E
Secondary current is 5A or 1A (by order)

- ***Outline Drawing :***

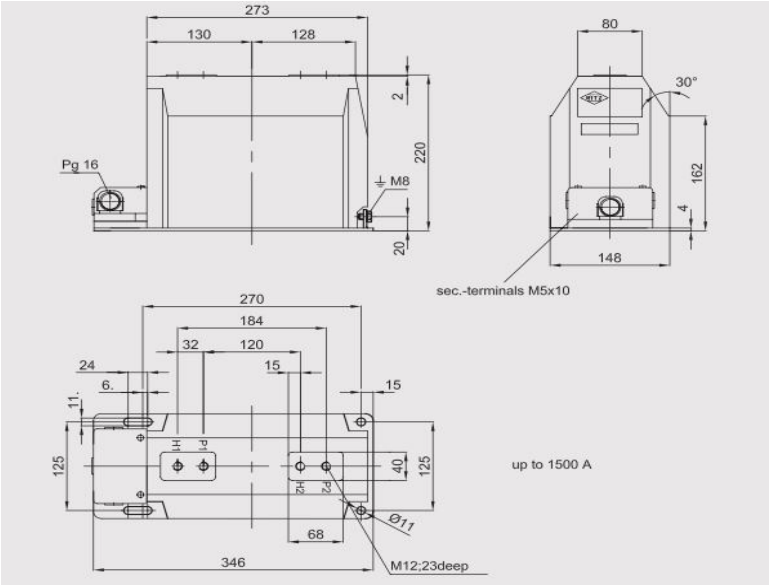

approx.weight =19.5kg

Type	*Rated Voltage Um kV*	*Rated primary current Ipn A*	*Rated secondary current*				*Rated short-time thermal current(Ith) kA/1s*	*VA rating VA*	*Unit Price (THB)*
			1st core		*2nd core*				
			Sec.Current Isn1 A	*Class (measuring-class)*	*Sec.Current Isn2 A*	*Class (protection-class)*			
		50	*5*	*0.5*	*5*	*5P10*	*25*	*10*	*22,650.00*
		100	*5*	*0.5*	*5*	*5P10*	*25*	*10*	*22,650.00*
		150	*5*	*0.5*	*5*	*5P10*	*25*	*10*	*22,650.00*
		200	*5*	*0.5*	*5*	*5P10*	*25*	*10*	*20,400.00*
		250	*5*	*0.5*	*5*	*5P10*	*25*	*10*	*20,400.00*
		300	*5*	*0.5*	*5*	*5P10*	*25*	*10*	*20,400.00*
GSWS12-01RS	*12*	*400*	*5*	*0.5*	*5*	*5P10*	*25*	*10*	*20,400.00*
		500	*5*	*0.5*	*5*	*5P10*	*25*	*10*	*20,400.00*
		600	*5*	*0.5*	*5*	*5P10*	*25*	*10*	*20,400.00*
		800	*5*	*0.5*	*5*	*5P10*	*25*	*10*	*20,400.00*
		1000	*5*	*0.5*	*5*	*5P10*	*25*	*10*	*20,600.00*
		1200	*5*	*0.5*	*5*	*5P10*	*25*	*10*	*22,900.00*
		1500	*5*	*0.5*	*5*	*5P10*	*25*	*10*	*25,750.00*
GSWS12-05RS	*12*	*2000*	*5*	*0.5*	*5*	*5P10*	*25*	*10*	*25,800.00*
		2500	*5*	*0.5*	*5*	*5P10*	*25*	*10*	*29,150.00*
GIS12K	*12*	*3000*	*5*	*0.5*	*5*	*5P10*	*25*	*10*	*37,075.00*

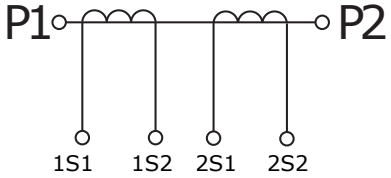

Schematic double core insulated current transformer

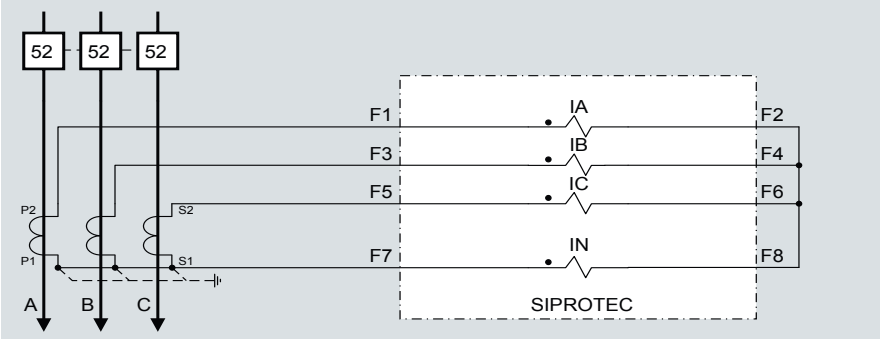

AIS 12kV Current Transformer Series.
GSWS12-01RS / GSWS12-05RS 12kV 31.5kA

- ***Feature :***

The secondary terminals are embedded in the resin body and protected by a removable plastic box, and can be sealed. Capacitive Layer 20pF can be added as option for voltage indication.

- ***Standard :***

Indoor application, complied with IEC61869-2
Insulation Level: 12/28/75kV, Class: E
Secondary current is 5A or 1A (by order)

- ***Outline Drawing :***

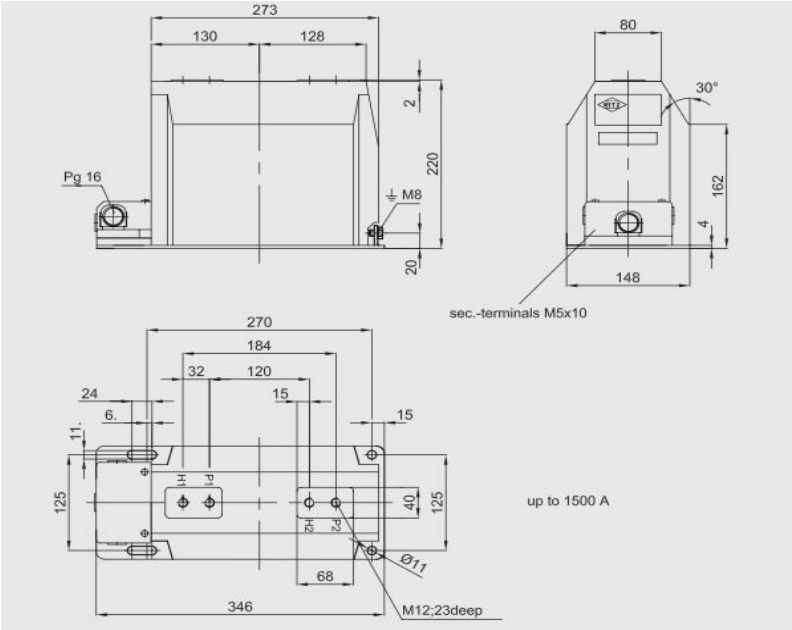

approx.weight =19.5kg

Type	Rated Voltage Um kV	Rated primary current Ipn A	Rated secondary current 1st core Sec.Current Isn1 A	1st core Class (measuring-class)	2nd core Sec.Current Isn2 A	2nd core Class (protection-class)	Rated short-time thermal current(Ith) kA/1s	VA rating VA	Unit Price (THB)
		100	5	0.5	5	5P10	31.5	10	23,000.00
		150	5	0.5	5	5P10	31.5	10	23,000.00
		200	5	0.5	5	5P10	31.5	10	23,000.00
		250	5	0.5	5	5P10	31.5	10	23,000.00
		300	5	0.5	5	5P10	31.5	10	23,000.00
GSWS12-01RS	12	400	5	0.5	5	5P10	31.5	10	23,000.00
		500	5	0.5	5	5P10	31.5	10	23,000.00
		600	5	0.5	5	5P10	31.5	10	23,000.00
		800	5	0.5	5	5P10	31.5	10	23,000.00
		1000	5	0.5	5	5P10	31.5	10	23,000.00
		1200	5	0.5	5	5P10	31.5	10	23,000.00
		1500	5	0.5	5	5P10	31.5	10	25,750.00
GSWS12-05RS	12	2000	5	0.5	5	5P10	31.5	10	25,750.00
		2500	5	0.5	5	5P10	31.5	10	29,150.00
GIS12K	12	3000	5	0.5	5	5P10	31.5	10	37,080.00

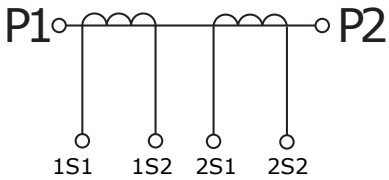

Schematic double core insulated current transformer

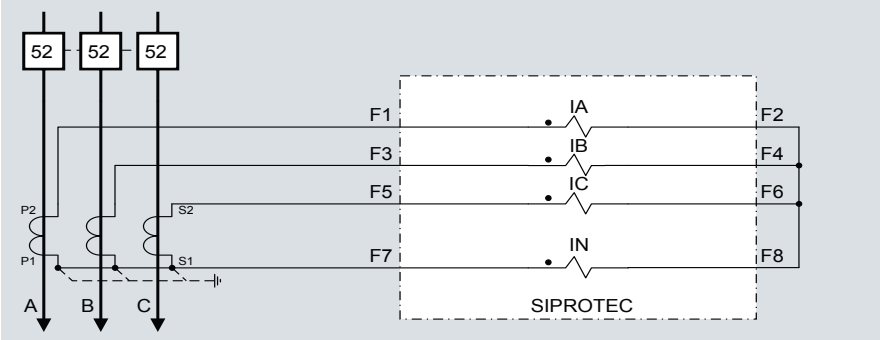

AIS 12kV Current Transformer Series.
GSWS12-01RS / GSWS12-05RS 12kV 40kA

- ***Feature :***

The secondary terminals are embedded in the resin body and protected by a removable plastic box, and can be sealed.
Capacitive Layer 20pF can be added as option for voltage indication.

- ***Standard :***

Indoor application, complied with IEC61869-2
Insulation Level: 12/28/75kV, Class: E
Secondary current is 5A or 1A (by order)

- ***Outline Drawing :***

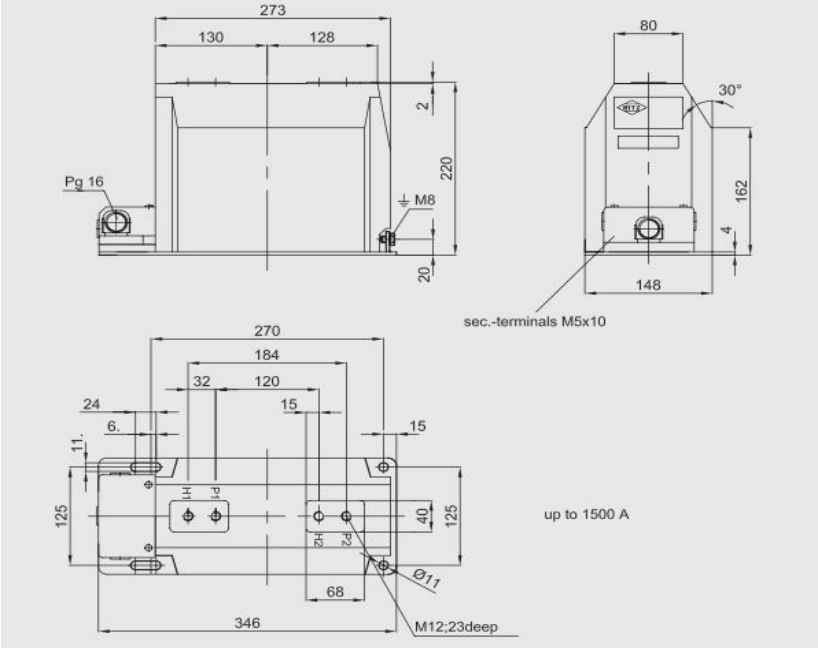

approx.weight =19.5kg

Type	*Rated Voltage Um*	*Rated primary current Ipn*	*Rated secondary current* 1st core *Sec.Current Isn1*	1st core *Class (measuring-class)*	2nd core *Sec.Current Isn2*	2nd core *Class (protection-class)*	*Rated short-time thermal current(Ith)*	*VA rating*	*Unit Price*
	kV	*A*	*A*		*A*		*kA/1s*	*VA*	*(THB)*
		100	*5*	*0.5*	*5*	*5P10*	*40*	*10*	*24,750.00*
		150	*5*	*0.5*	*5*	*5P10*	*40*	*10*	*24,750.00*
		200	*5*	*0.5*	*5*	*5P10*	*40*	*10*	*24,750.00*
		250	*5*	*0.5*	*5*	*5P10*	*40*	*10*	*24,750.00*
		300	*5*	*0.5*	*5*	*5P10*	*40*	*10*	*24,750.00*
GSWS12-01RS	***12***	*400*	*5*	*0.5*	*5*	*5P10*	*40*	*10*	*24,750.00*
		500	*5*	*0.5*	*5*	*5P10*	*40*	*10*	*24,750.00*
		600	*5*	*0.5*	*5*	*5P10*	*40*	*10*	*24,750.00*
		800	*5*	*0.5*	*5*	*5P10*	*40*	*10*	*24,750.00*
		1000	*5*	*0.5*	*5*	*5P10*	*40*	*10*	*24,750.00*
		1200	*5*	*0.5*	*5*	*5P10*	*40*	*10*	*24,750.00*
		1500	*5*	*0.5*	*5*	*5P10*	*40*	*10*	*28,000.00*
GSWS12-05RS	***12***	*2000*	*5*	*0.5*	*5*	*5P10*	*40*	*10*	*28,000.00*
		2500	*5*	*0.5*	*5*	*5P10*	*40*	*10*	*31,200.00*
GIS12K	***12***	*3000*	*5*	*0.5*	*5*	*5P10*	*40*	*10*	*38,310.00*

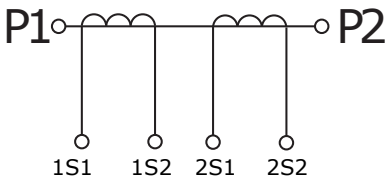

Schematic double core insulated current transformer

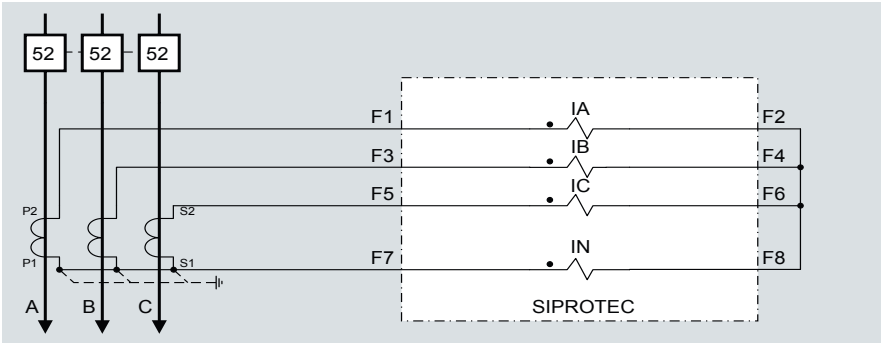

AIS 24kV Current Transformer Series.
GSWS24-01 24kV 25kA

- ***Feature :***

The secondary terminals are embedded in the resin body and protected by a removable plastic box, and can be sealed. Capacitive Layer 20pF can be added as option for voltage indication.

- ***Standard :***

Indoor application, complied with IEC61869-2
Insulation Level: 24/50/125kV, Class: E
Secondary current is 5A or 1A (by order)

- ***Outline Drawing :***

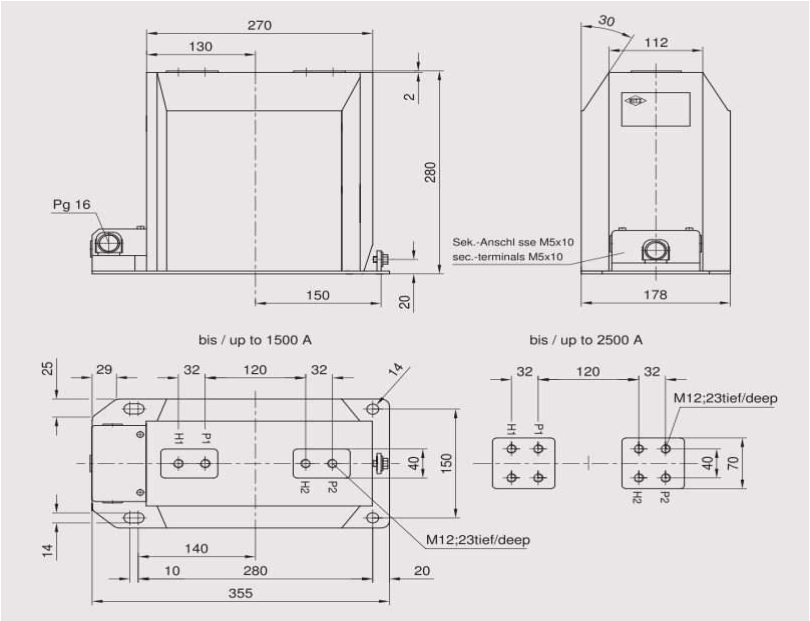

approx.weight =28kg

Type	*Rated Voltage Um kV*	*Rated primary current Ipn A*	*Rated secondary current*				*Rated short-time thermal current(Ith) kA/1s*	*VA rating VA*	*Unit Price (THB)*
			1st core		*2nd core*				
			Sec.Current Isn1 A	*Class (measuring-class)*	*Sec.Current Isn2 A*	*Class (protection-class)*			
		50	*5*	*0.5*	*5*	*5P10*	*25*	*10*	*26,500.00*
		100	*5*	*0.5*	*5*	*5P10*	*25*	*10*	*26,500.00*
		150	*5*	*0.5*	*5*	*5P10*	*25*	*10*	*26,500.00*
		200	*5*	*0.5*	*5*	*5P10*	*25*	*10*	*26,500.00*
		250	*5*	*0.5*	*5*	*5P10*	*25*	*10*	*26,500.00*
		300	*5*	*0.5*	*5*	*5P10*	*25*	*10*	*26,500.00*
GSWS24-01RS	*22*	*400*	*5*	*0.5*	*5*	*5P10*	*25*	*10*	*26,500.00*
		500	*5*	*0.5*	*5*	*5P10*	*25*	*10*	*26,500.00*
		600	*5*	*0.5*	*5*	*5P10*	*25*	*10*	*26,500.00*
		800	*5*	*0.5*	*5*	*5P10*	*25*	*10*	*26,500.00*
		1000	*5*	*0.5*	*5*	*5P10*	*25*	*10*	*27,000.00*
		1200	*5*	*0.5*	*5*	*5P10*	*25*	*10*	*27,000.00*
		1500	*5*	*0.5*	*5*	*5P10*	*25*	*10*	*27,000.00*
		2000	*5*	*0.5*	*5*	*5P10*	*25*	*10*	*31,500.00*
		2500	*5*	*0.5*	*5*	*5P10*	*25*	*10*	*34,000.00*

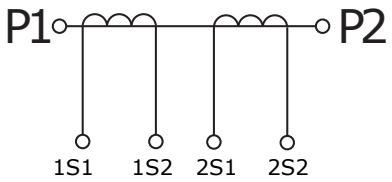

Schematic double core insulated current transformer

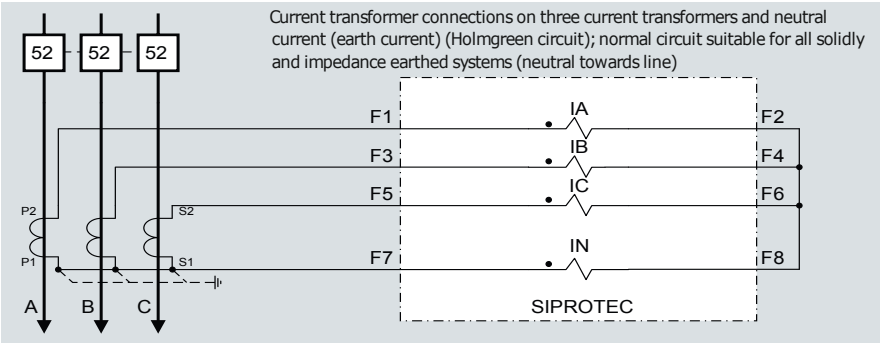

ZERO-SEQUENCE PROTECTION CT SERIES
RK-2716 CURRENT TRANSFORMER

- ***Feature :***

The secondary terminals are embedded in the resin body and protected by a removable plastic box, and can be sealed. Capacitive Layer 20pF can be added as option for voltage indication.

- ***Standard :***

Indoor application, complied with IEC61869-2
Insulation Level: 24/50/125kV, Class: E
Secondary current is 5A or 1A (by order)

- ***Outline Drawing :***

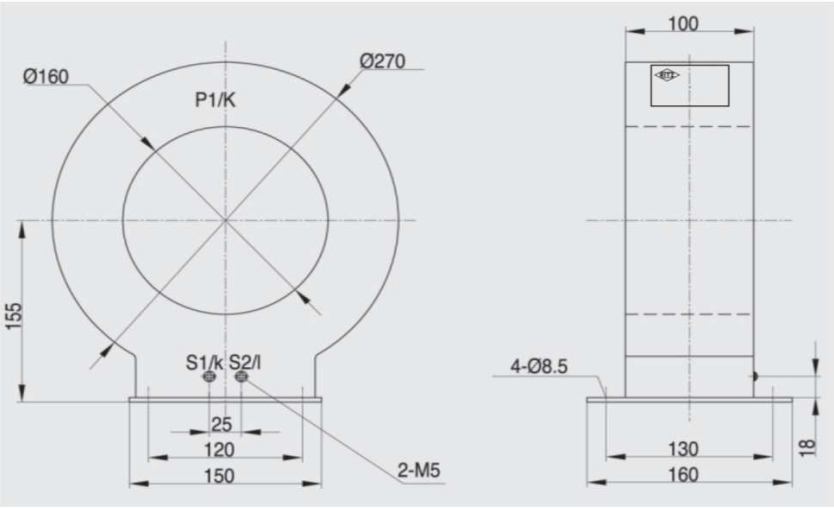

Approx.Weight=15kg

Type	*Rated Voltage Um*	*Rated primary current Ipn*	*Rated secondary current 1st core Sec.Current Isn1*	*Class*	*Insulation level*	*Inside Diameter*		*VA rating*	*Unit Price*
	kV	*A*	*A*		*kV*	*mm*		*VA*	*(THB)*
		50	*1*	*1*					
	can be use	*60*	*1*	*3*					
RK 2716	*in zero-sequence protection of the 12kV, 24kV and 40.5kV*	*75*	*1*	*5*	*0.72/3kV*	*160mm*		*2.5*	*20,600.-*
		100	*1*	*5P10*					
		150	*1*	*10P10*					

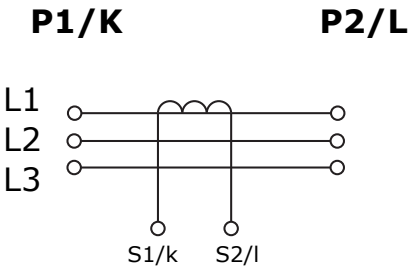

Schematic single core
insulate current transformer
Zero-Sequence Protection

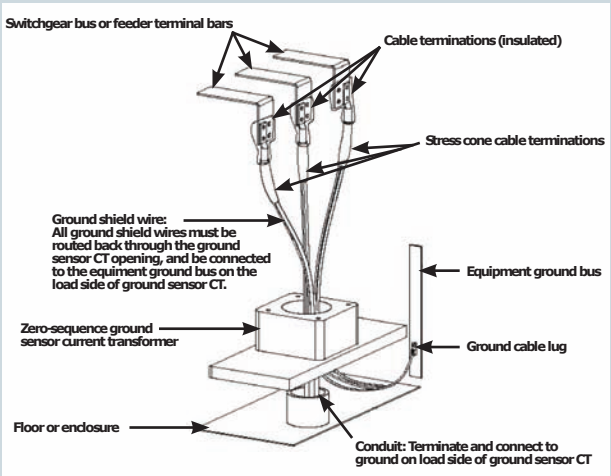

Figure 1: Correct cable installation with zero-sequence ground current transformers.